COOLCOX®

DC Blower Fan 45x45x10mm

■ 尺寸图 (DIMENSION DRAWING)

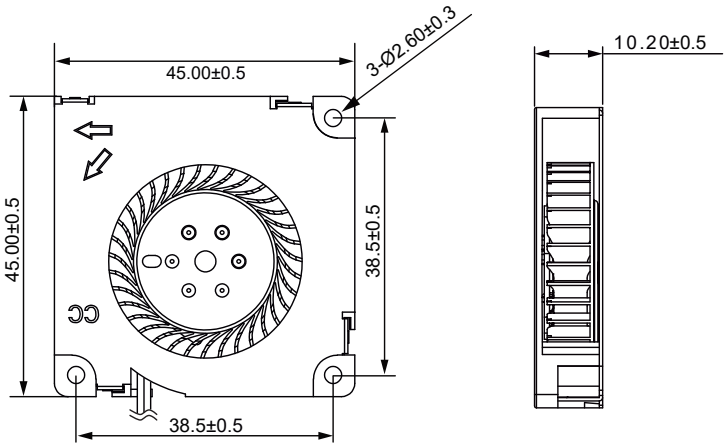

Unit:mm

* 轴承类型:液压轴承, FDB轴承
  (Bearing type:Hydraulic,FDB)
* 材料(Material):
  扇叶(Impeler):PBT
  框(Frame):PBT & SECC
* 引线(Lead wire):
  UL1061 AWG #28 or equivalent
  红色线正级 Red Wire Positive (+)
  黑色线负级 Black Wire Negative (-)
* 可选择增加风扇功能(Functions are optional)
* 重量(Weight):18g

■ 风压&风量曲线图 P and Q CURVE

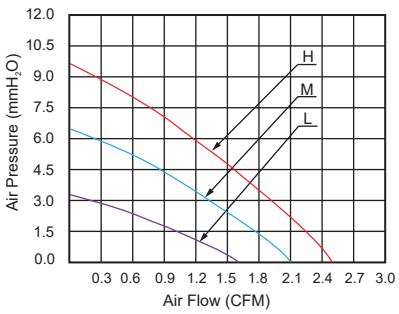

型号 Model	轴承类型 Bearing Type	版本 Version	电压 Rated Voltage	电流 Current	功率 Input Power	转速 Speed	风量 Air Flow	风压 Static Pressure	噪音 Noise Level
			VDC	Amp	Watt	RPM	CFM	MM-H_2O	dBA
BF4510L05SH	Hydraulic	-B	5V	0.15	0.75	4,000±10%	1.60	3.10	20.0
BF4510L05S3	FDB								
BF4510M05SH	Hydraulic	-B	5V	0.20	1.00	5,000±10%	2.10	6.30	25.0
BF4510M05S3	FDB								
BF4510H05SH	Hydraulic	-B	5V	0.30	1.50	6,000±10%	2.50	9.50	31.0
BF4510H05S3	FDB								
BF4510L12SH	Hydraulic	-B	12V	0.05	0.60	4,000±10%	1.60	3.10	20.0
BF4510L12S3	FDB								
BF4510M12SH	Hydraulic	-B	12V	0.10	1.20	5,000±10%	2.10	6.30	25.0
BF4510M12S3	FDB								
BF4510H12SH	Hydraulic	-B	12V	0.15	1.80	6,000±10%	2.50	9.50	31.0
BF4510H12S3	FDB								

* 以上为额定电压下的常规参数(All readings are typical values at rated voltage)
* 规格如有变动不另行通知(Specifications are subjected to change without prior notice)